REV	ECO	DWN	DATE
A	20088530	JRA	04-SEPT-01
-	--------	---	---------

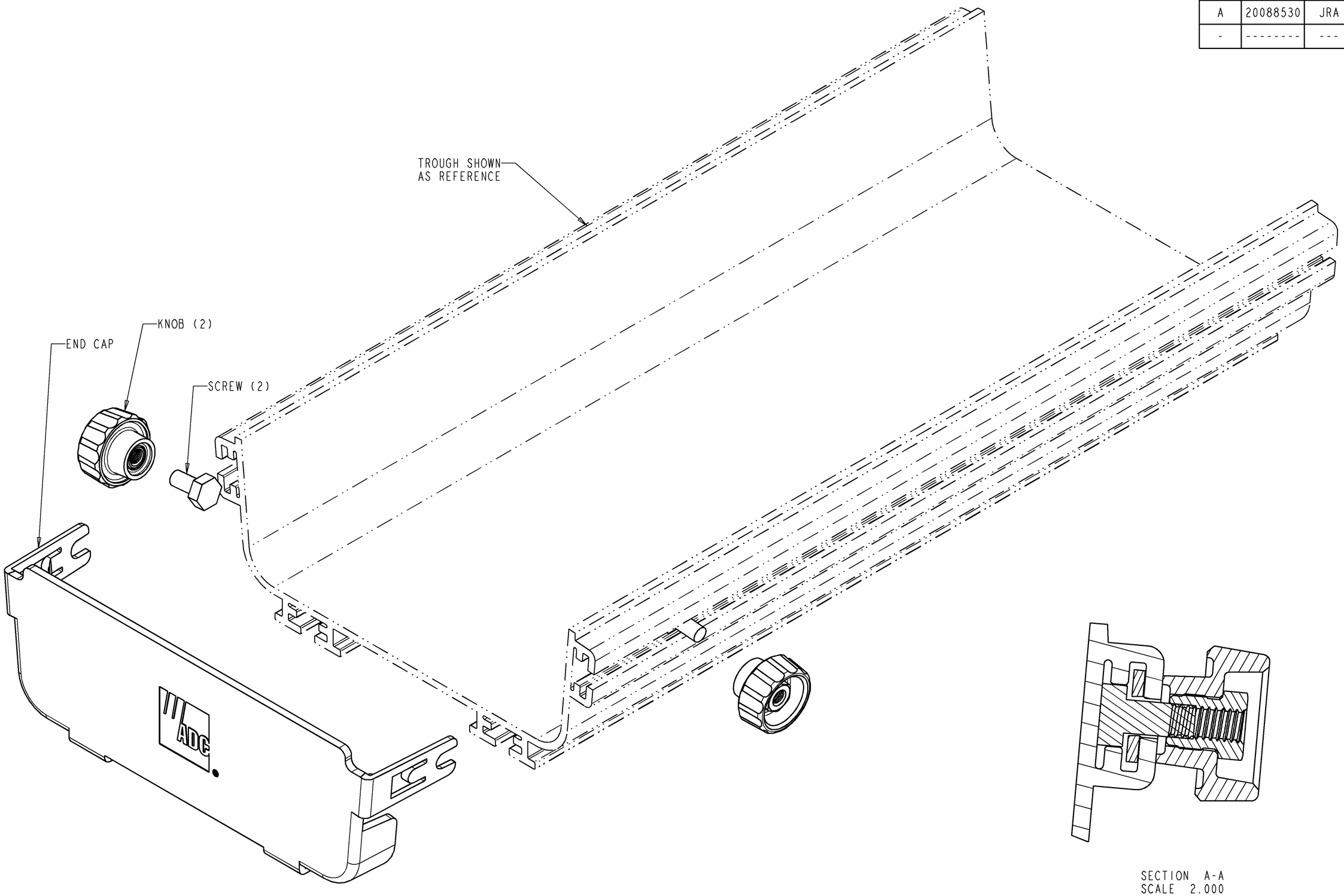

SECTION A-A
SCALE 2.000

NOTES:

1. INSERT SCREWS (2) INTO T-SLOTS AS SHOWN IN SECTION A-A.
2. SLIDE END CAP INTO TROUGH T-SLOTS, GUIDING FORKS INTO SCREWS AS SHOWN IN SECTION A-A.
3. PLACE KNOBS (2) ON SCREWS AND TIGHTEN SECURELY.

COLOR	CATALOG NO.
BLACK	FGS-HMEC-G

INFORMATION ON THIS DOCUMENT IS PROPRIETARY TO ADC AND SHALL NOT BE USED, COPIED, REPRODUCED OR DISCLOSED IN WHOLE OR IN PART WITHOUT WRITTEN CONSENT OF ADC.

TITLE: KIT, END CAP, 2X6, FGS, INSTALLATION DRAWING

TOLERANCE UNLESS OTHERWISE SPECIFIED .XX:±xx .XXX:±xxx ANGULAR:±N/A

SIZE: C

DRAWING NUMBER: 1174770

REV: A

THIRD ANGLE PROJECTION

DO NOT SCALE DRAWING

ENGR: J VAN SCOY

DWN: W GIESEN

SHT. 1 OF 2

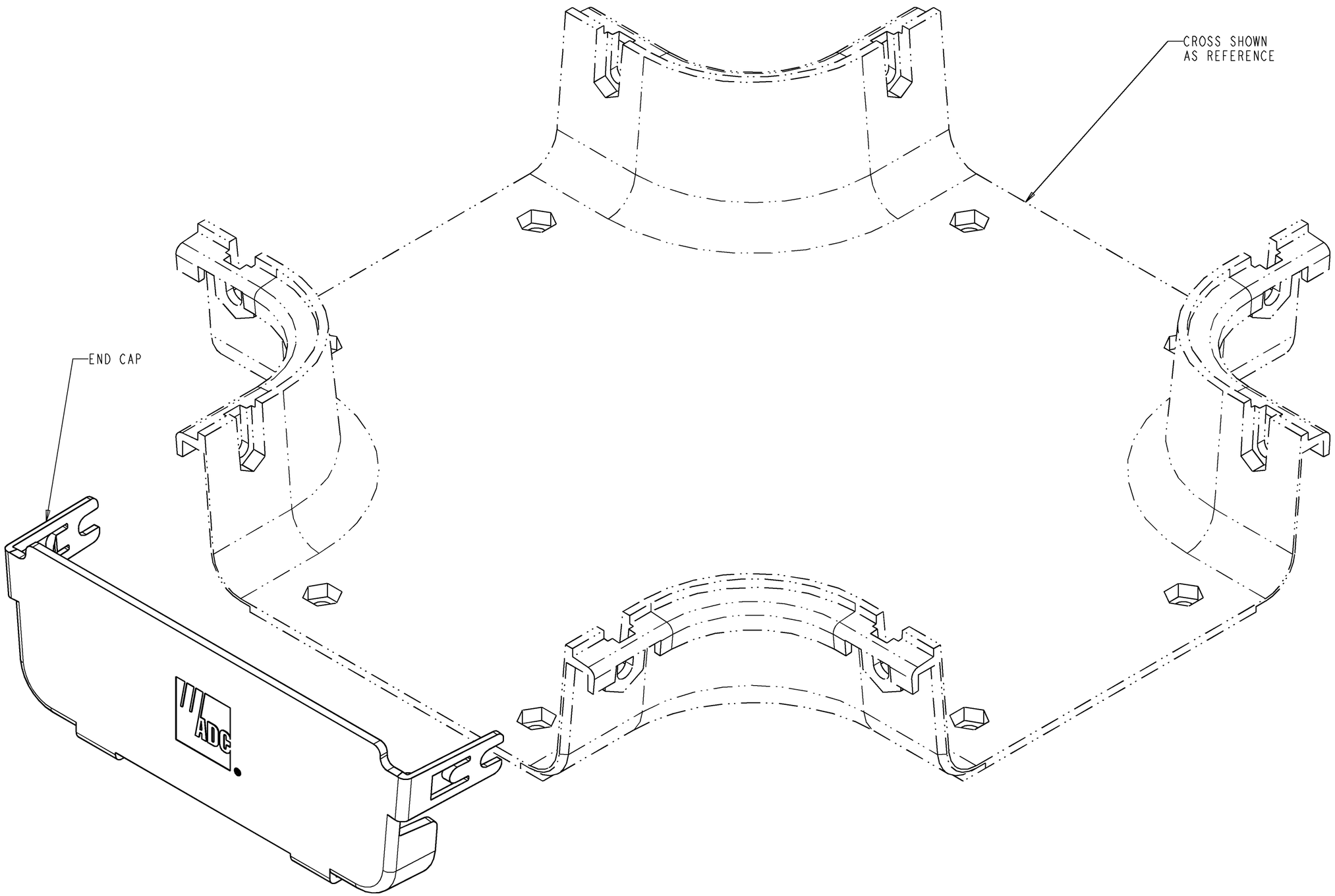

NOTES:

1. SLIDE END CAP INTO FITTING UNTIL TABS ON SIDE FORKS SNAP IN PLACE.

INFORMATION ON THIS DOCUMENT IS PROPRIETARY TO ADC AND SHALL NOT BE USED, COPIED, REPRODUCED OR DISCLOSED IN WHOLE OR IN PART WITHOUT WRITTEN CONSENT OF ADC.

TITLE KIT, END CAP, 2X6, FGS, INSTALLATION DRAWING			
TOLERANCE UNLESS OTHERWISE SPECIFIED .XX:±xx .XXX:±xxx ANGULAR:±N/A	C SIZE	DRAWING NUMBER 1174770	A REV
THIRD ANGLE PROJECTION	DO NOT SCALE DRAWING	ENGR: J VAN SCOY DWN: W GIESEN	SHT. 2 OF 2