GEM
CABLE SOLUTIONS

THIS DRAWING IS UNPUBLISHED. RELEASED FOR PUBLICATION .19 .
© COPYRIGHT 19 BY AMP INCORPORATED. ALL RIGHTS RESERVED.

LOC	DIST
AA	20

REVISIONS

F	LTR	DESCRIPTION	DATE	DWN	APVD
	AF	REVISED; EC 0U1C-0040-01	09MAR01	DLD	EWB

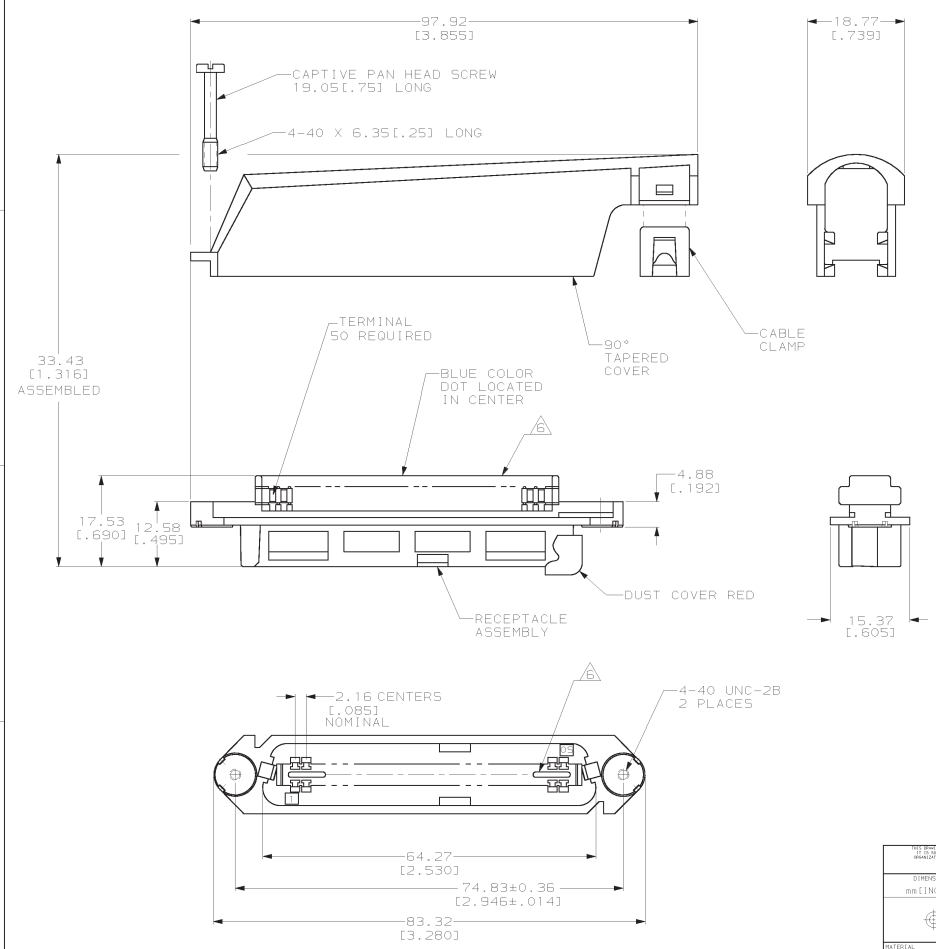

1. THE CONTACT SURFACES OF THE TERMINALS ARE COATED WITH LUBRICANT.

2. DIMENSIONS ARE MAXIMUM UNLESS OTHERWISE SPECIFIED.

3. MATERIAL: HOUSING AND COVER - POLYPHENYLENE OXIDE.
CABLE CLAMP - POLYESTER MOLDING COMPOUND.
TERMINALS - GOLD OVER NICKEL PLATED HIGH STRENGTH COPPER ALLOY.
HARDWARE - ZINC PLATED STEEL.
DUST COVER - POLYETHYLENE MOLDING COMPOUND.

4. THIS KIT SHIPPED NOT ASSEMBLED.

5. WIRE SIZE: 24 & 26 AWG SOLID & 24 AWG STRAND COPPER CONDUCTORS. MAXIMUM INSULATION DIAMETER OF 1.15[.045] IS ACCEPTABLE FOR MOST APPLICATIONS.

6. CORING MAY OR MAY NOT APPEAR AND IS AT THE DISCRETION OF AMP INCORPORATED.

229913

PACKAGING	CABLE RANGE	DUST COVER	COLOR	PART NUMBER
BULK PACKED	ø7.62-8.26 [ø.300-.325]	YES	BLACK	6-229913-7
	ø8.89-10.80 [ø.350-.425]	YES	GRAY	6-229913-4
		YES	BLACK	6-229913-3
		NO	BLACK	6-229913-1
POLY BAGGED	ø10.80-12.70 [ø.425-.500]	YES	BLACK	3-229913-1
		NO	BLACK	2-229913-1
	ø8.89-10.80 [ø.350-.425]	YES	GRAY	1-229913-4
		YES	BLACK	1-229913-1
		NO	GRAY	229913-4
		NO	BLACK	229913-1

THIS DRAWING IS A CONTROLLED DOCUMENT FOR AMP INCORPORATED. IT IS SUBJECT TO CHANGE AND THE CONTROLLING ENGINEERING ORGANIZATION SHOULD BE CONTACTED FOR THE LATEST REVISION.

DWN 30 AUG 93 L. McEACHIN/UTA
CHK 09 NOV 93 C. WHITT
APVD 15 NOV 93 J. TRAMMEL

DIMENSIONS: mm[INCHES]
TOLERANCES UNLESS OTHERWISE SPECIFIED.
0 PLC ±-
1 PLC ±-
2 PLC ±-
3 PLC ±-
4 PLC ±-
ANGLES ±-
MATERIAL 3
FINISH 3

PRODUCT SPEC –
APPLICATION SPEC –
WEIGHT –

AMP
AMP Incorporated
Harrisburg, PA 17105-3608

NAME RECEPTACLE KIT, 50 POSITION, B-SLOT, SCREW LOCK, TAPERED COVER, CHAMP-LOK®

SIZE	CAGE CODE	DRAWING NO
A2	00779	C-229913

CUSTOMER DRAWING
SCALE 2:1 SHEET 1 OF 1 REV AF

AMP 1471-9 REV 09MAY94

13-MAR-01 14:22:01 amp36051 /home/amp36051/edmod

Unit 10, The Dencora Centre, Campfield Road, St. Albans, Herts AL1 5HN, United Kingdom.
T 44 (0)1727 845750 | F 44 (0)1727 838780 | E info@gemcable.co.uk | W gemcable.co.uk

nqa. ISO 9001 Registered
UKAS QUALITY MANAGEMENT