REV	ECO	DWN	DATE
A	20087401	CNC	10-APR-01
-	------	---	--------

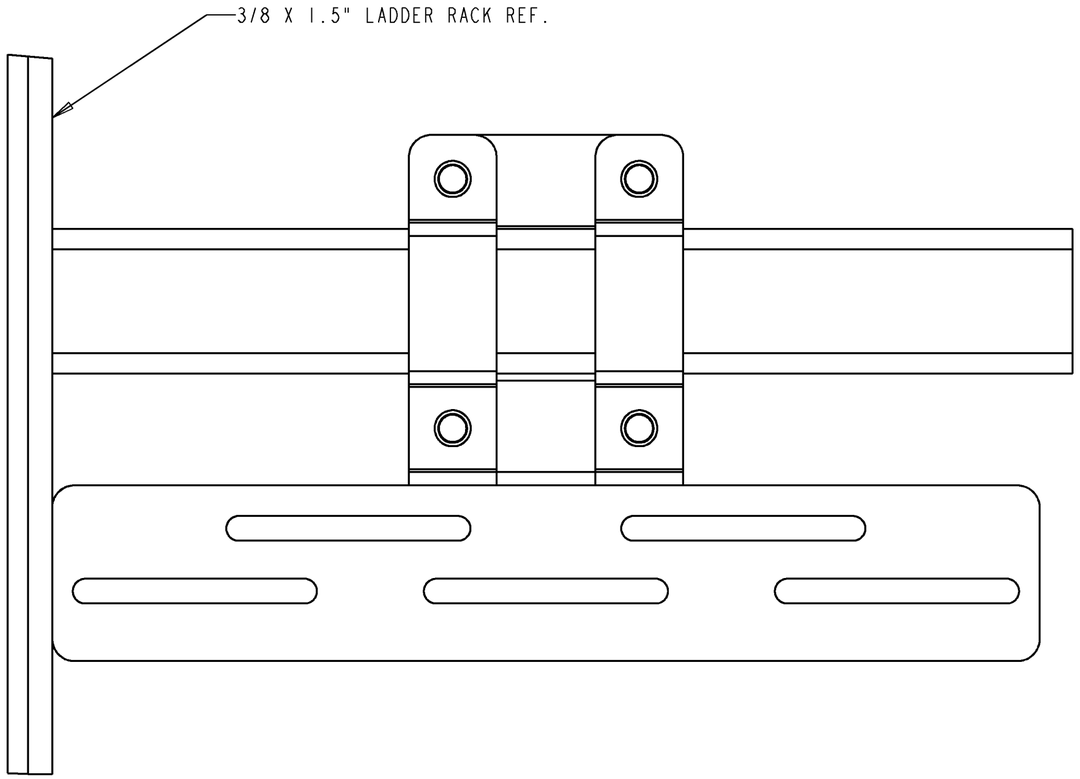

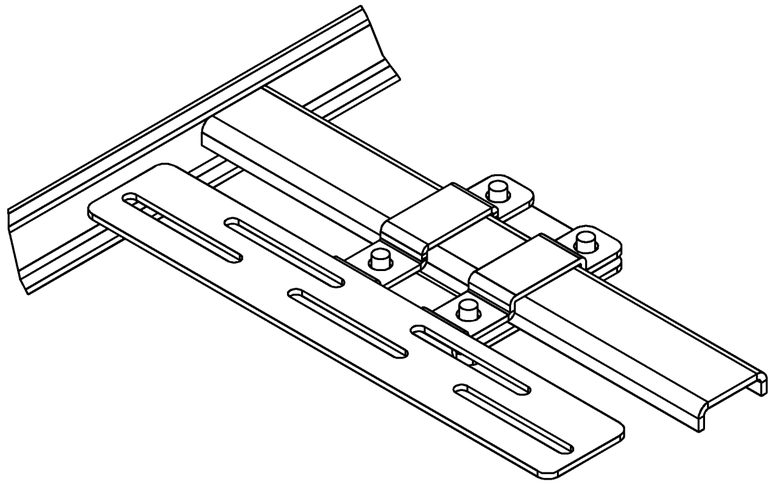

SCALE 0.500

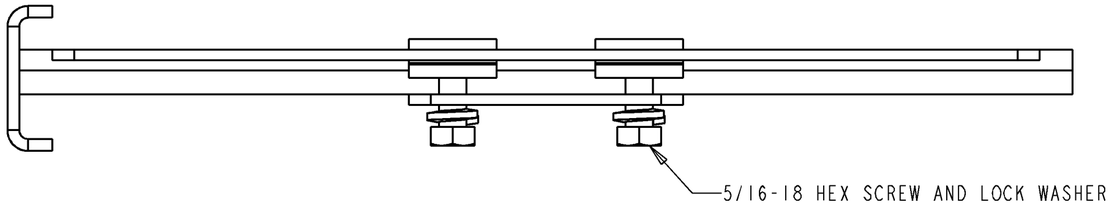

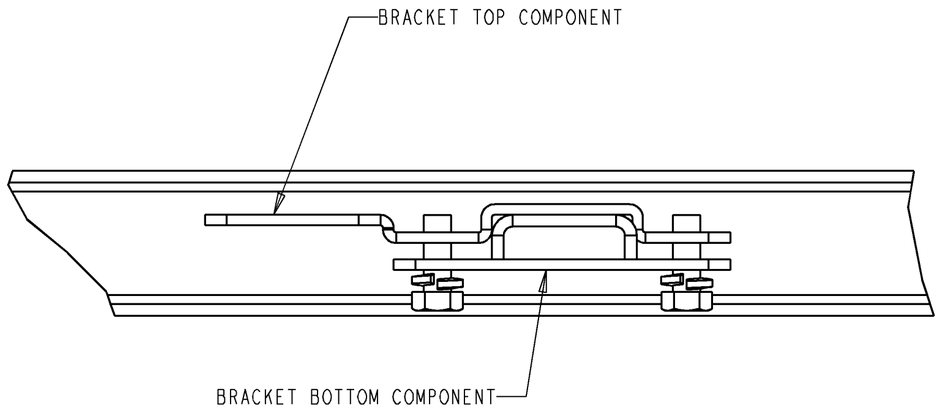

NOTES:

1. PARTS INCLUDED WITH KIT AS FOLLOWS:

(1) BRACKET, TOP
(1) BRACKET, BOTTOM
(4) 5/16-18 HEX SCREW
(4) 5/16 LOCK WASHER
(3) QUICK KNOB ASSEMBLY

2. SEE SHEET 2 FOR MOUNTING FIBERGUIDE.

CATALOG #: FGS-HNLR-F

ADC

INFORMATION ON THIS DOCUMENT IS PROPRIETARY TO ADC AND SHALL NOT BE USED, COPIED, REPRODUCED OR DISCLOSED IN WHOLE OR IN PART WITHOUT WRITTEN CONSENT OF ADC.

TITLE 12" FGS LADDER RACK BRKT INSTL DRW

TOLERANCE UNLESS OTHERWISE SPECIFIED .XX:±.02 .XXX:±.010 ANGULAR:±2°

SIZE C

DRAWING NUMBER 1168829

REV A

THIRD ANGLE PROJECTION

DO NOT SCALE DRAWING

ENGR: DEREK DERKS

DWN: CRAIG ZELASKO

SHT. 1 OF 2

REV	ECO	DWN	DATE

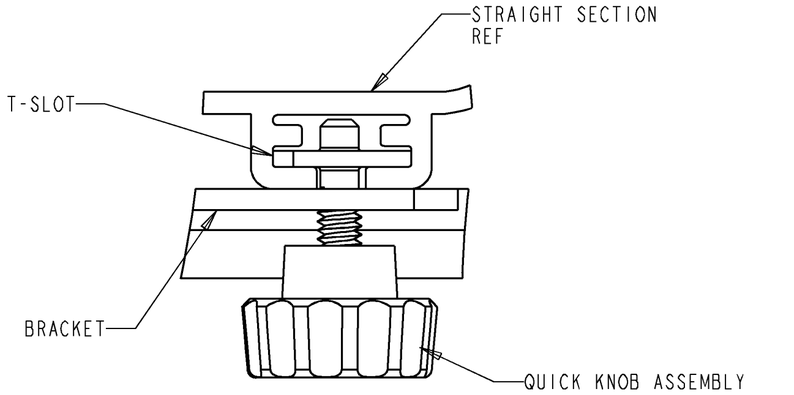

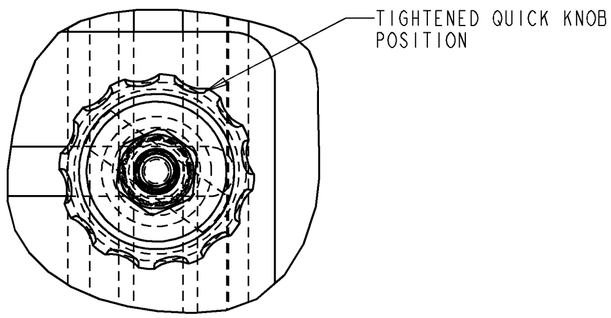

DETAIL A
QUICK KNOB INSTALLATION
SCALE 1.500

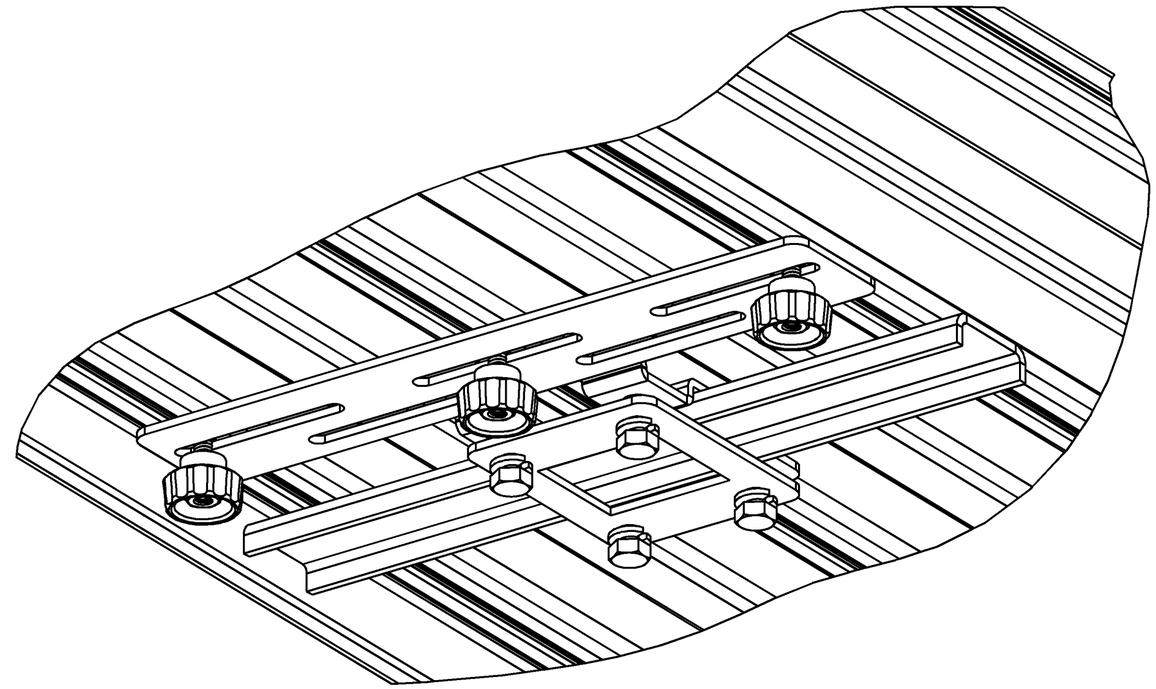

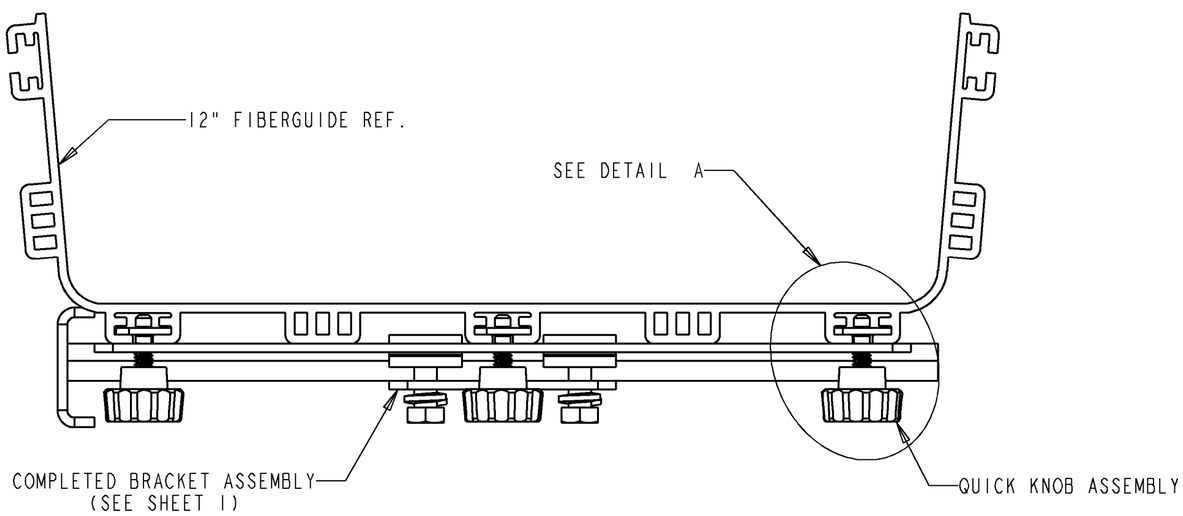

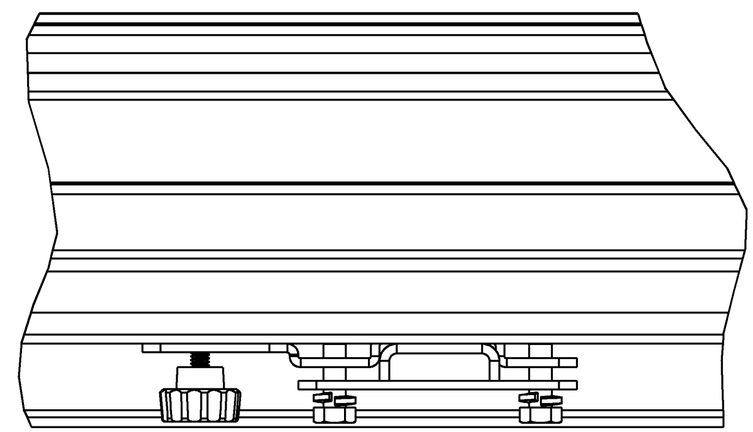

NOTE:

QUICK KNOB INSTALLATION INSTRUCTIONS:

1. INSERT QUICK KNOB ASSEMBLY THROUGH BRACKET, AND ROTATE 90° INTO T-SLOT IN FGS STRAIGHT SECTION. ROTATE QUICK KNOB CLOCKWISE SUCH THAT QUICK KNOB FLANGES EXTEND INTO T-SLOT.

2. TIGHTEN KNOB COMPLETELY.

INFORMATION ON THIS DOCUMENT IS PROPRIETARY TO ADC AND SHALL NOT BE USED, COPIED, REPRODUCED OR DISCLOSED IN WHOLE OR IN PART WITHOUT WRITTEN CONSENT OF ADC.

TITLE
12" FGS LADDER RACK BRKT INSTL DRW

TOLERANCE UNLESS OTHERWISE SPECIFIED .XX:±.02 .XXX:±.010 ANGULAR:±2°

SIZE: C

DRAWING NUMBER: 1168829

REV: A

THIRD ANGLE PROJECTION

DO NOT SCALE DRAWING

ENGR: DEREK DERKS

DWN: CRAIG ZELASKO

SHT. 2 OF 2